FORIGO

SINCE 1972

GREEN BUG

Insect aspirator

Ready to fit you

GREEN BUG

Insect aspirator

FORIGO
Ready to fit you

Among the living beings of the animal kingdom that are harmful to plants, insects occupy the first place for the number of damaging species. They cause a lot of damages: some eat directly the plant tissues, others suck the sap, sometimes injecting toxic noxious substances into the vessels, others acting as carriers of disease.

The Green bug allows not to use pesticides in soil and on plants that could compromise the whole ecosystem.

DESCRIPTION

The GREEN BUG is a towed machine, and its main function is to vacuum any type of insect. It can work on agricultural crops in open field or in greenhouse.
Thanks to the forced aspiration, the insect is separated from the leaves of the crop through a tunnel with special perforated grids from which it will be crushed.
The use of this machine drastically reduces the presence of the insect on the plant, guaranteeing an intact and not damaged final product, and reduce significantly the uses of pesticides and similar products.

COMPONENTS

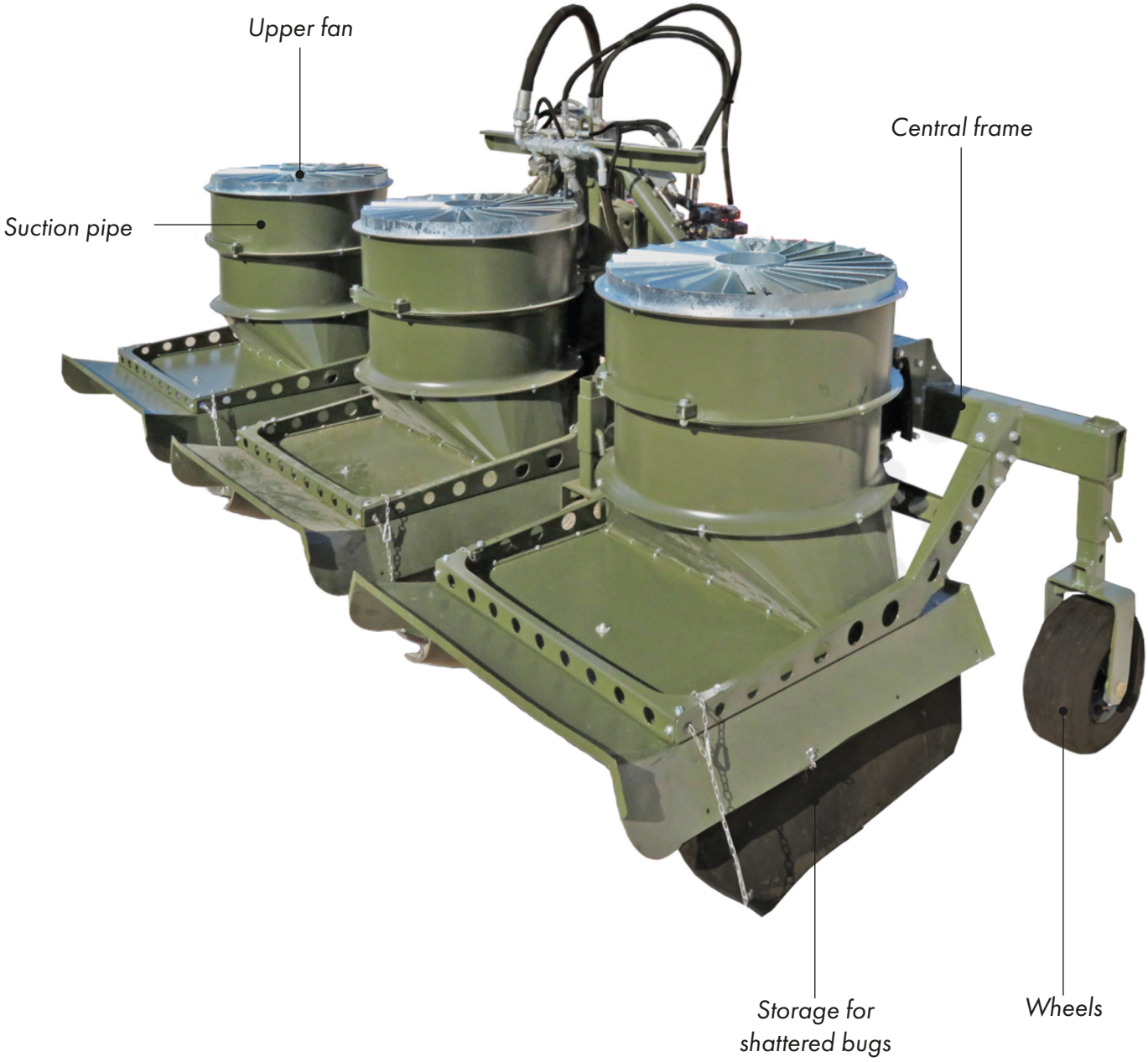

CHARACTERISTICS

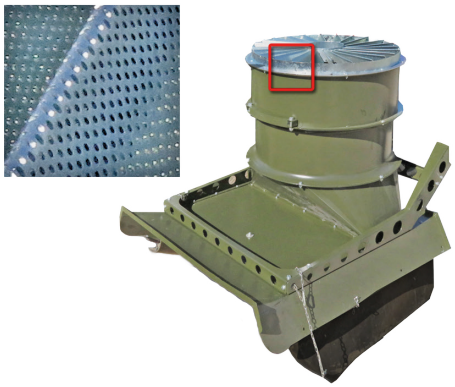

System for the forced aspiration and crushing of harmful insects.

Storage net which prevents the dispersion of processed residues, such as insects and dried leaves.

Depending on the customer's needs, the frame can be fixed or folding.

A designated hydraulic system, complete with heat exchanger, feeds the hydraulic motors of the suction system.

Control display in a comfortable position for the operator, who can manage all operating functions of the machine.

TWO OR THREE BEDS

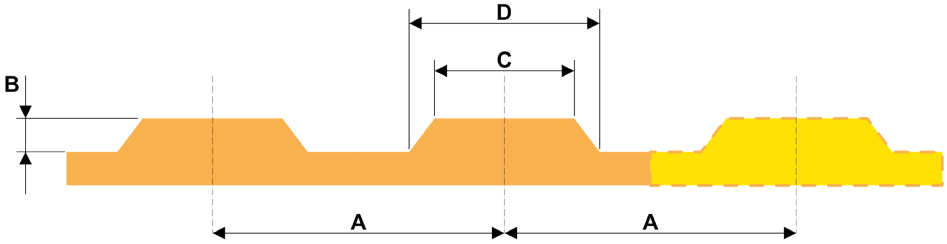
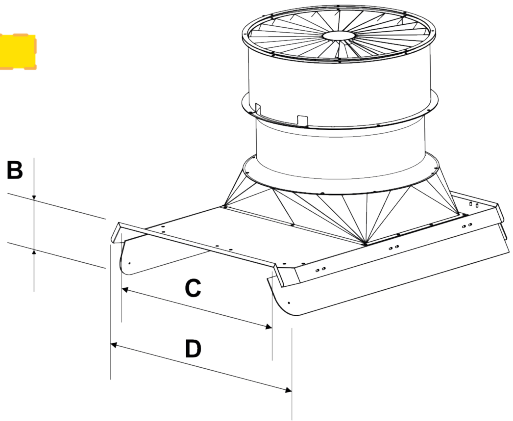
The machine is custom designed, according to the length and number of beds (e.g. two or three beds with customized measures).